Parent 3D model	9820955800		Ed.Vers 3D	02.00
Nota Note	Posi-tion	Gewijzigd van Modified from	Datum Date	Ingev./Goedg Intr./Appd.
03		O-ring and service kit number added.	2009-04-08	AIR15074

Service kit number: 2901 1944 00

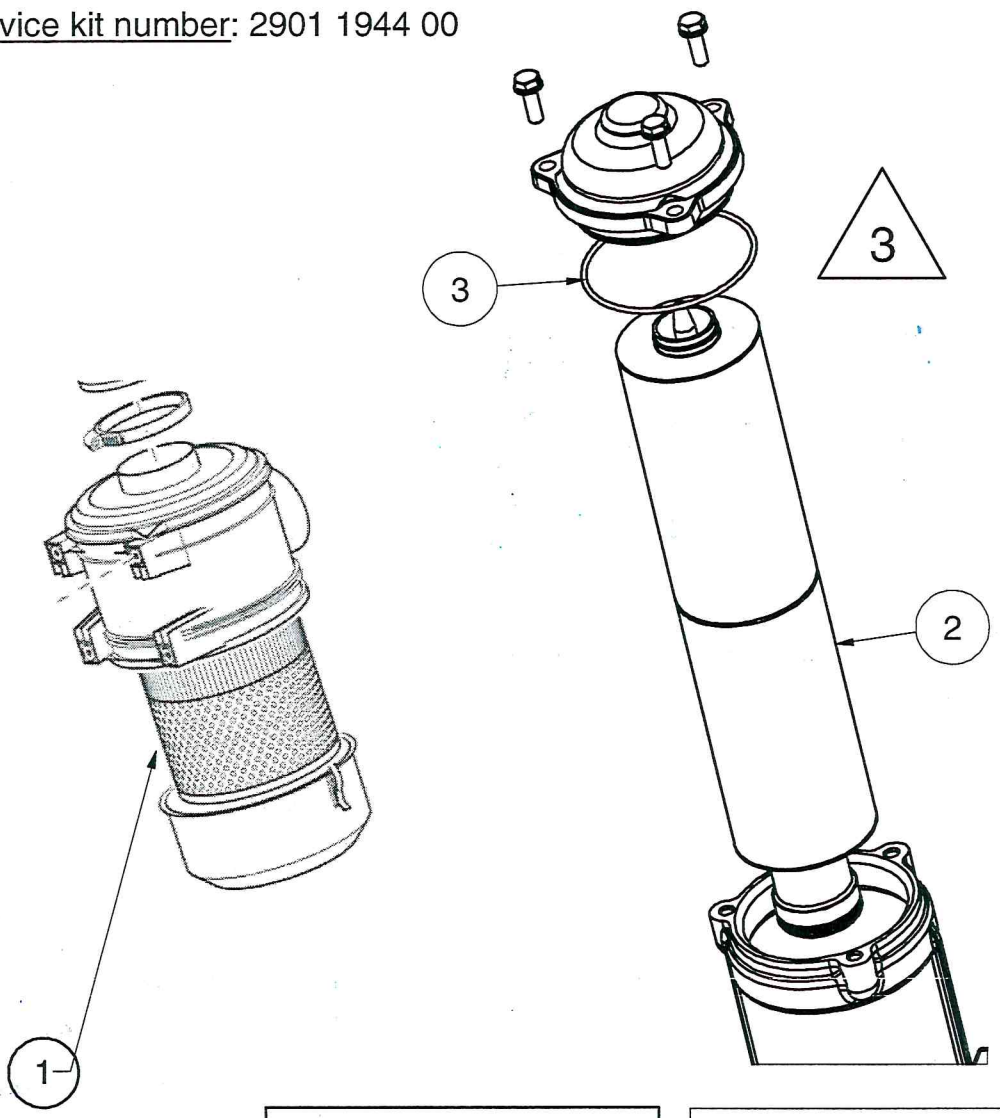

CONFIDENTIAL

All materials supplied are in compliance with the requirements of the List of Prohibited Substances

Parts List

Pos	Qty	Partnumber	Name
1	1	-	AIR FILTER ELEMENT
2	1	-	OIL FILTER ELEMENT
3	1	-	O-RING

Toleranties, indien niet aangegeven, zijn volgens: Tolerances, if not indicated, according to:				
ATLAS COPCO STANDARD /Klasse/CLASS				

Benaming Name	KIT (AIR/OIL FILTER KIT 4000 HRS)	Geheimh.klasse Secrecy Class	
Materiaal Material	SEE DRAWING	1102 K / 3	
Behandeling Treatment	Untreated	INV	

Atlas Copco	Schaal Scale	Familie Family	A4	Vergelijk Compare	Eigenaar Drawing owner
	Getekend Drawn by AIR15074	Ruw nr. Blank nr.		Vervangt Replaces	All
STATUS	Version Drwg 03.00	Ruw gew. Blank wt 0 Kg	Afg gew. Fini wt. 0.0 Kg	Identificatie/Designation	Blad/Sheet 01 / 01
Approved	Des gez./chd.	Prod gez/chd.	Goedg./Appd.	Datum/Date 2005-07-29	9820955800

Dit document is onze eigendom en zal niet zonder toestemming worden gewijzigd, gekopieerd, gebruikt voor fabricatie of mededeling aan enig ander persoon of firma. This document is our property and shall not without our perimission be altered, copied, used for manufacturing or communicated to any other person or company.

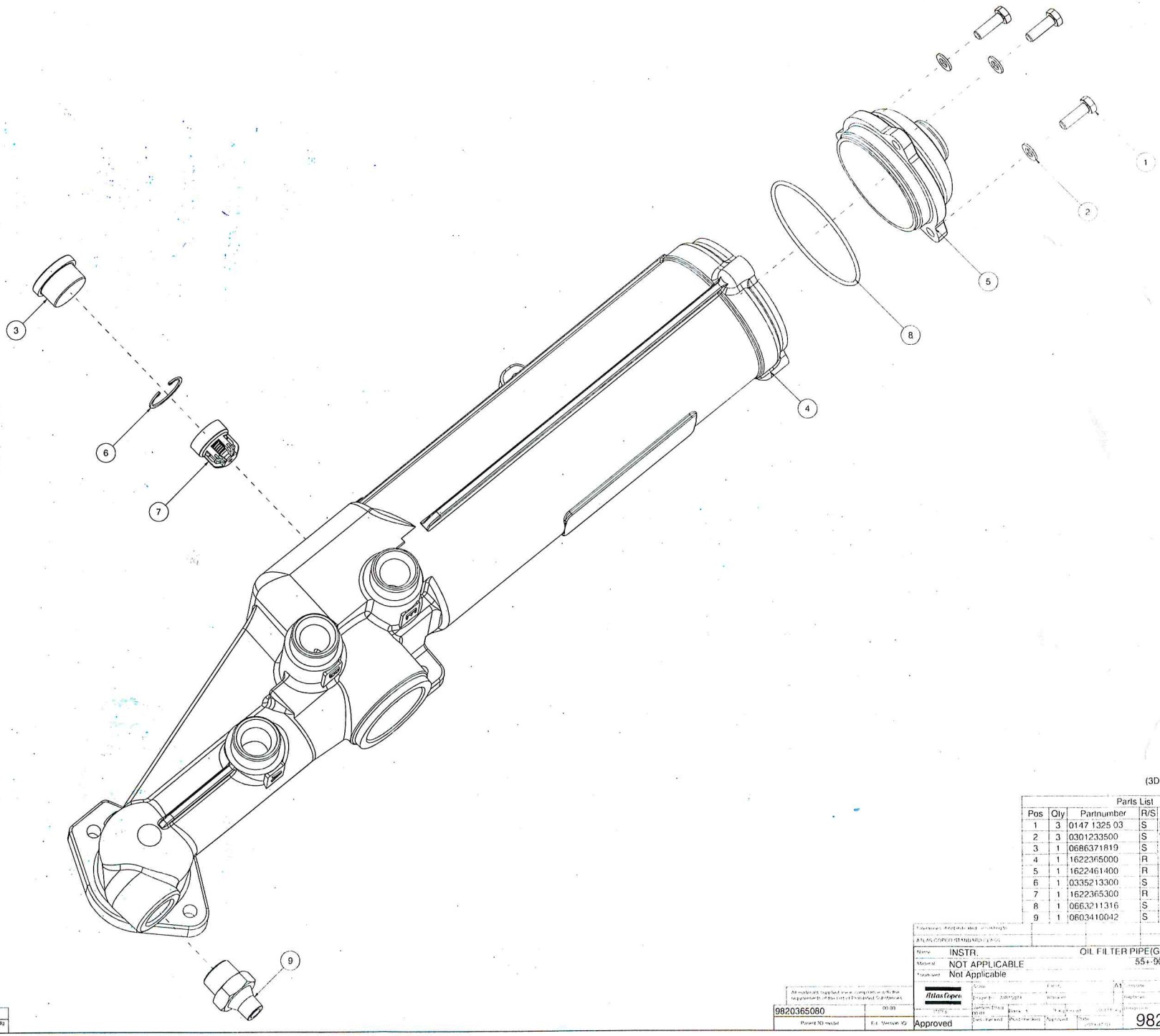

(3D VIEW - NO SCALE)

Parts List				
Pos	Qty	Partnumber	R/S	Name
1	3	0147 1325 03	S	BOLT
2	3	0301233500	S	WASHER
3	1	0686371819	S	PLUG
4	1	1622365000	R	FILTER HOUSING
5	1	1622461400	R	COVER
6	1	0335213300	S	CIRCLIP
7	1	1622365300	R	BYPASS
8	1	0663211316	S	O- RING
9	1	0603410042	S	NIPPLE

Tolerances: Unspecified - according to ATLAS COPCO STANDARD CLASS

Name: INSTR. OIL FILTER PIPE(GA 55+-90)

Material: NOT APPLICABLE

Treatment: Not Applicable

NV

Atlas Copco

Approved

9820365080

9820365080

CONFIDENTIAL

Ed	Position	Gewijzigd van / Modified from	Datum / Date	Ingev. Goedg. / Inb. Appd
00			2009.07.06	

FOR FS

Mount filter 1089 9556 23 in the grid 1089 9556 05 as shown.

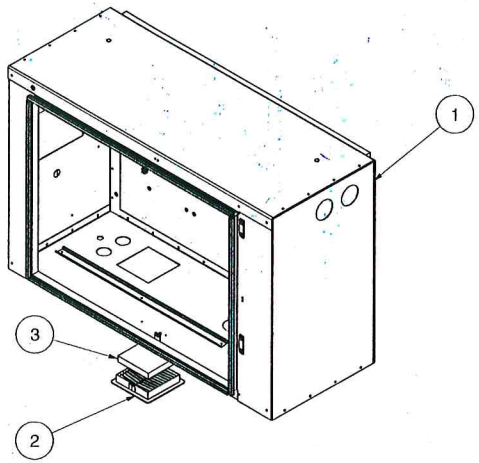

Parts List				
Pos	Qty	Partnumber	R/S	Name
1	1	1622360280	R	CUBICLE
2	1	1089955605	S	AIR INLET
3	1	1089955623	S	FILTER

FOR VSD

△1 Mount cover 1622 5500 00 and filter 1622 8557 10 for GA unit / filter 1622 8557 00 for MAS unit as shown.

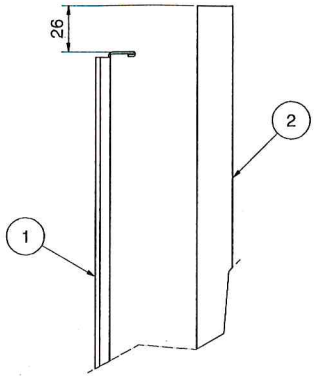

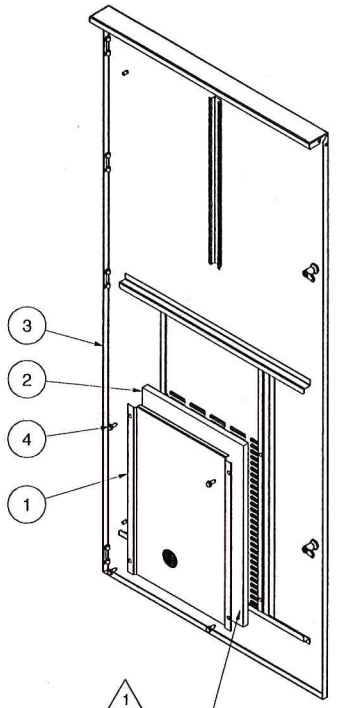

△1 The side with text needs to be visible when the door is open

Parts List					
Pos	Qty	Partnumber	R/S	Name	Comments
1	1	1622550000	R	COVER	
2	1	1622855710	R	FILTER	For GA unit
△1	1	1622855700	R	FILTER	For MAS unit
3	1	1622553180	R	DOOR	
4	4	0147 1963 08	S	BOLT	

CONFIDENTIAL:
This document is our property and shall not be reproduced without our permission be altered, copied, used for manufacturing or communicated to any other person or company.

Ed	Position	Modified from	Date	Ingev./Goedg. Intr./Appd.
01		Filter added for MAS unit	2010-07-05	

All materials supplied are in compliance with the requirements of the List of Prohibited Substances

9820602500	01.00
Parent 3D model	Ed . Version 3D

Tolerances, if not indicated, according to: ATLAS COPCO STANDARD CLASS

Name	INSTR.	GA55+-90	Secrecy Class	
Material	SEE DRAWING		1102 K / 3	
Treatment	Untreated		INV	
Atlas Copco	Scale 1:10	Family	A2	Compare
	Drawn by sraman .	Blank nr.		Replaces
STATUS	Version Drwg 01.04	Blank wt. 0 Kg	Finl wt. 0.0 Kg	Designation
Approved	Des checked.	Prod checked.	Approved.	Date 2008-03-03

Drawing owner: All

Sheet 1 / 1

9820602500